Glynn Johnson 70 & 79 Door Holders/Stop

ROBERT BROOKE AND ASSOCIATES

70 Series Heavy-Duty
79 Series Extra Heavy-Duty

Glynn-Johnson offers a complete line of overhead holders and stops, providing solutions for the most complex door control problems. Glynn-Johnson 70 series and 79 series surface-mounted holders and stops are designed to meet the demands of high-traffic industrial applications. These units are simple to install.

Compatible with a variety of door closers, these models come with templates to allow for variable mounting positions, ranging from 85° to 110° Hold-Open/Stop angle. These templates are designed for installation in almost all types of doors, including doors with conventional butt-type hinges or specialty hinges.

Four Models:
- 70H Series Hold-Open Model – Heavy-Duty
- 70S Series Stop-Only Model – Heavy-Duty
- 79H Series Hold-Open Model – Extra Heavy-Duty
- 79S Series Stop-Only Model – Extra Heavy-Duty

Five Sizes:
- Simple
- Standardized
- Each model is available in five sizes

Three Options:
- J—Angle Jamb Bracket
- SB—Sex Bolt Mounting
- SOC—Pin-in-Socket Security Screws

Unmatched Convenience:
- Non-Handed
- Single-Acting Doors
- Interior/Exterior Applications
- Durable
- Easy to Install
- Improved Corrosion Resistance
- Function Conversion Kits Available

Materials and Finishes:
Glynn-Johnson 70 and 79 series models are constructed primarily of Brass and 300 series Stainless Steel substrates, with several components fabricated of Steel treated to resist corrosion. Models in the 70 series utilize a 1/2"-diameter stainless steel bar, while the 79 series uses a 3/4" stainless steel bar.

The bar is always provided in US32D. The spring, washer and nut are provided in a clear zinc finish. The door bracket, jamb bracket and hook (for Hold-Open units) are available in the following finishes: US3, US4, US10, US10B, US26, US26D, SP4, SP10, SP28, SP313 and SPBLK.

Models

Glynn-Johnson 70 and 79 series holders and stops offer rugged durability and ease of installation. The surface-applied door and jamb brackets provide reliable door control, yet require minimal door and frame preparation.

Glynn-Johnson 70 series Hold-Open and Stop-Only models provide heavy-duty door protection. The 79 series models incorporate the basic characteristics of the 70 series, but can protect extremely heavy or large doors subject to violent use or abusive conditions (i.e., vault doors, cell doors, oversized plant entry doors).

70H and 79H Series Hold-Open Models

(Suffix H) Hold-Open models in both series provide a selective Hold-Open function with easy-to-adjust tension. A simple 90° rotation of the roller mechanism disables the Hold-Open function, allowing the unit to serve as a shock-absorbing stop. The Hold-Open function provides a convenient method of holding the door open at a predetermined position for short or long periods of time, permitting an unobstructed traffic flow through the opening.

Both series provide a durable Hold-Open mechanism that can be turned off, allowing the unit to function as a shock-absorbing stop. The Hold-Open tension is simply adjusted incrementally for increased or decreased holding power by turning the nut at the end of the bar. While both series are designed for demanding applications, the 79 Series is recommended for extremely heavy or wide doors subject to violent or abusive conditions.

70S and 79S Series Stop-Only Models

(Suffix S) When the Hold-Open function is not a requirement, Stop-Only models provide a reliable method of door control. Stop-Only models provide the same shock-absorbing capability as Hold-Open models. The Stop-Only model may be used on fire doors.

585 SOUTH ETON ROAD, P.O. BOX 2010, BIRMINGHAM, MI 48012-2010
CALL: 1-800-642-2403 FAX: 1-800-642-2406 ASK FOR: GREG

Glynn Johnson 70 & 79 Door Holders/Stop

ROBERT BROOKE AND ASSOCIATES

Application Information

UL Classification

The 70 and 79 Series Stop-Only models are classified by Underwriters Laboratories (UL) as Miscellaneous Fire Door Accessories. This classification applies to use on either Hollow Metal Fire Doors or Wood Fire doors. These units may be used on doors of any rating. As a reminder, the Miscellaneous fire door Accessories (GVUX) Section is defined by UL as: "Miscellaneous fire door accessories are intended for installation with classified fire doors and/or listed fire door frame as identified in the individual listings. The accessories have been investigated to determine that when installed in accordance with the manufacturer's instructions, the accessories do not adversely affect the fire rating at the fire door and/or fire door frame."

Dead-Stop Templating:

Dead-Stop Templating is recommended for applications where a wall or similar obstruction is placed at an opening angle of 110° or less (i.e., doors that open back-to-back). Dead-Stop Templating can be applied to Hold-Open and Stop-Only models. The Dead-Stop position is the point at which the shock-absorbing spring is fully compressed. Therefore, when Dead-Stop Templating is used, the initial degree of opening will be 5° to 7° less than the Dead-Stop opening.

Example: If the holder is templated to a 100° dead stop, the door will hold open at an angle between 93° and 95° but no further than 100°.

Function Conversion Kits

- FK70H—Converts a 70S unit into a 70H unit. Specify FK70H–finish
- FK70S—Converts a 70H unit into a 70S unit. Specify FK70S.
- FK79H—Converts a 7S unit into a 79H unit. Specify FK79H-finish.
- FK79S—Converts a 79H unit into a 79S unit. Specify FK79S.

Options

Suffix J (Angle Jamb Bracket):

An angle jamb bracket is available to convert standard models to hinge-side or flush transom mounting If ordered with unit add suffix J. If needed separately, order either 70J or 79J by finish needed.

Suffix SB (Sex Bolt Mounting):

A package of 4 sex bolts provided with the 79 Series and a package of 2 sex bolts provided with the 70 Series.

Suffix SOC (Pin-in-Socket Security Screw):

A screw package with pin-in-socket screw for mounting both the door bracket and jamb bracket is provided instead of the standard screw package.

585 SOUTH ETON ROAD, P.O. BOX 2010, BIRMINGHAM, MI 48012-2010
CALL: 1-800-642-2403 FAX: 1-800-642-2406 ASK FOR: GREG

Glynn Johnson 70 & 79 Door Holders/Stop

ROBERT BROOKE AND ASSOCIATES

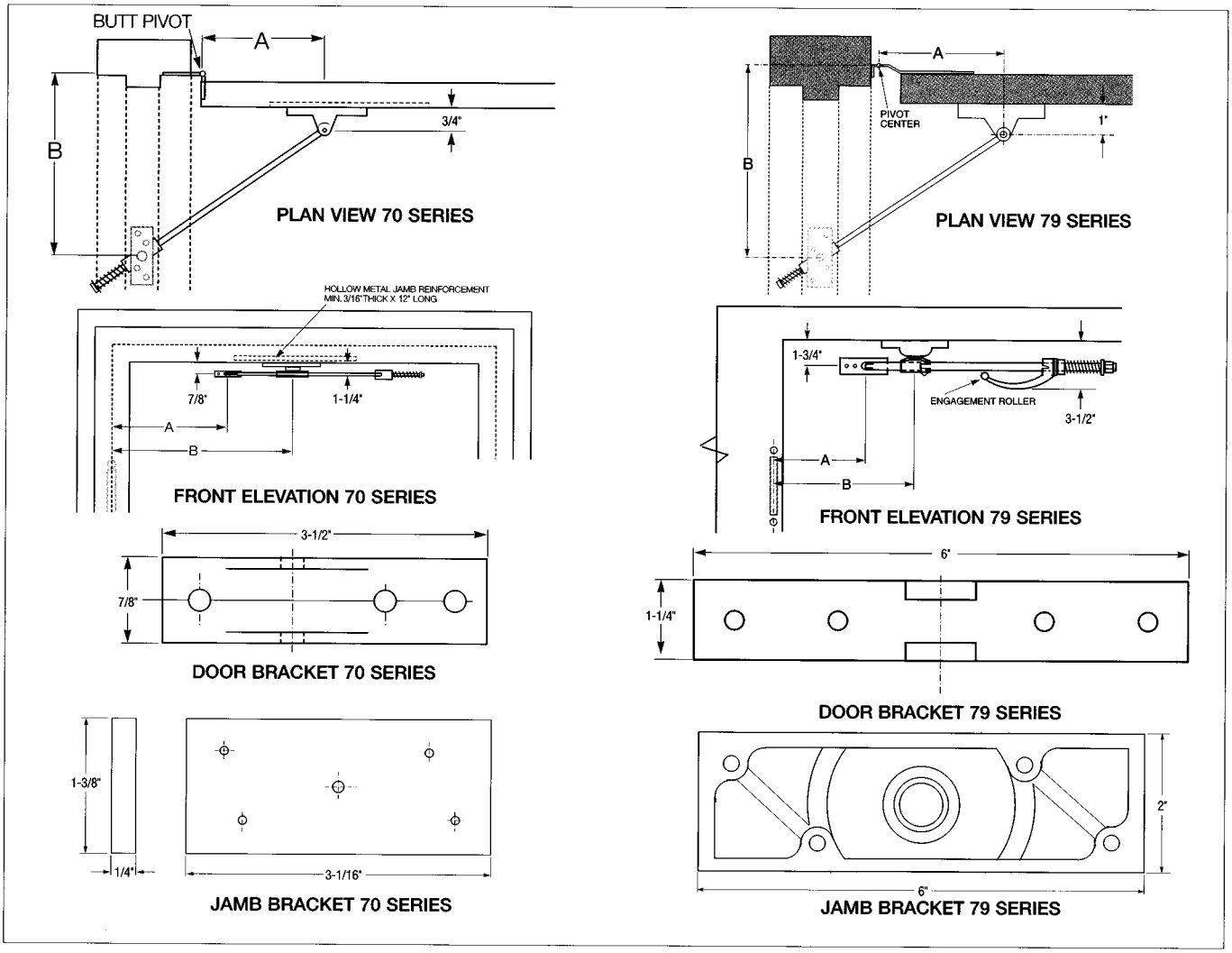

70 and 79 Series Sizing Chart						
	BUTTS/OFFSET PIVOTS			CENTER HUNG		
SIZE	DOOR OPENING	STOP ONLY	HOLD OPEN	DOOR OPENING	STOP ONLY	HOLD OPEN
1	-----	-----	-----	-----	----	----
2	23-1/16"–27"	702S/792S	702H/792H	27-1/16"–33"	702S/792S	702H/792H
3	27-1/16"–33"	703S/793S	703H/793H	33-1/16"–39"	703S/793S	703H/793H
4	33-1/16"–39"	704S/794S	704H/794H	39-1/16"–45"	704S/794S	704H/794H
5	39-1/16"–45"	705S/795S	705H/795H	45-1/16"–51"	705S/795S	705H/795H
6	45-1/16"– 51"	706S/796S	706H/796H	51-1/16"–59"	706S/796S	706H/796H

Note: This chart illustrates the most common types of hinging and door opening sizes.
For unusual door details, contact Glynn-Johnson for availability.

BHMA/ANSI, A156.8 & FED. Spec. Cross Reference		
G-J Model	BHMA	FED. Spec.
702H - 706H	C08511	G-J 70
702S - 706S	C08541	G-J 70
792H - 796H	C08511	G-J 70
792S - 796H	C08541	G-J 70

585 SOUTH ETON ROAD, P.O. BOX 2010, BIRMINGHAM, MI 48012-2010
CALL: 1-800-642-2403 FAX: 1-800-642-2406 ASK FOR: GREG